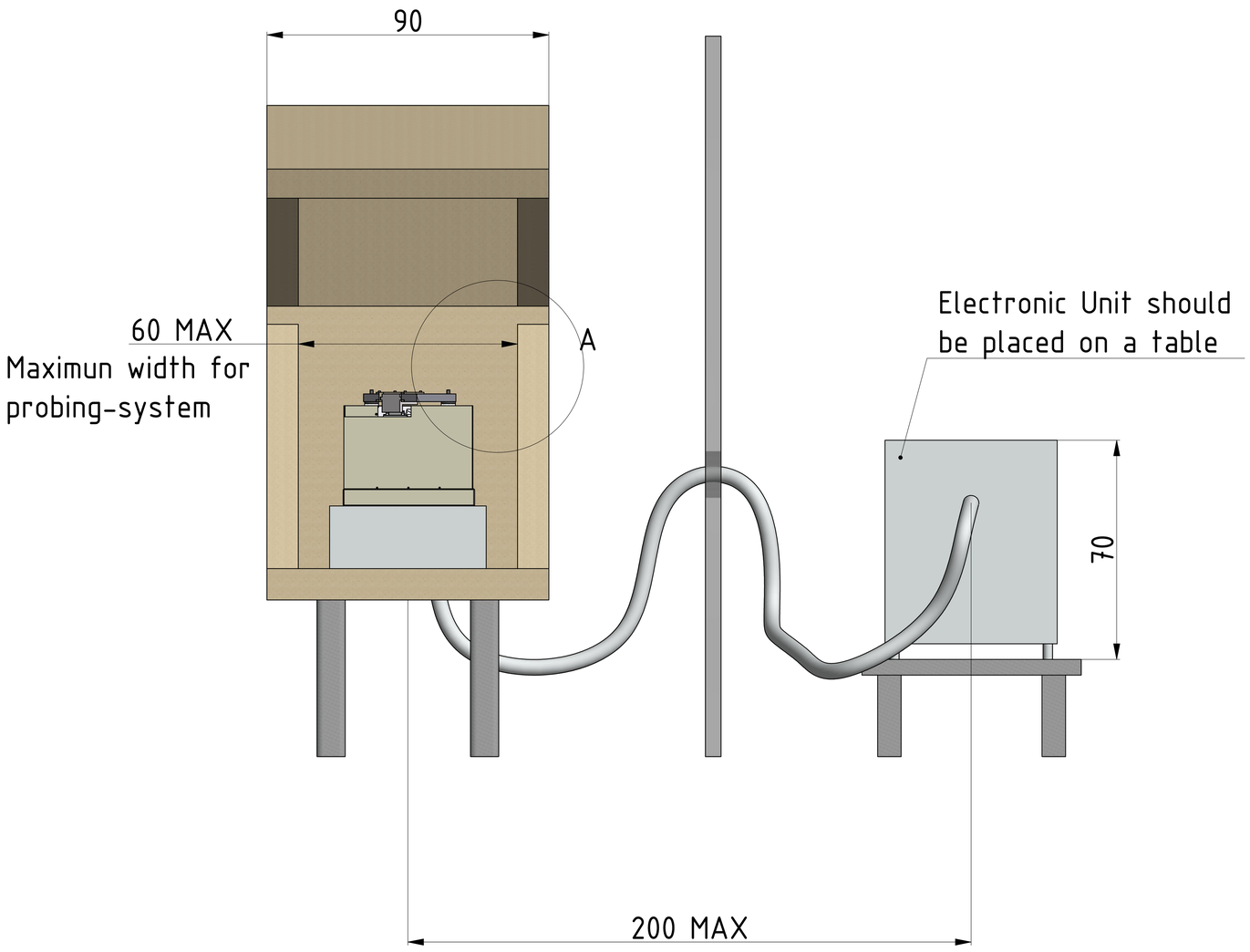


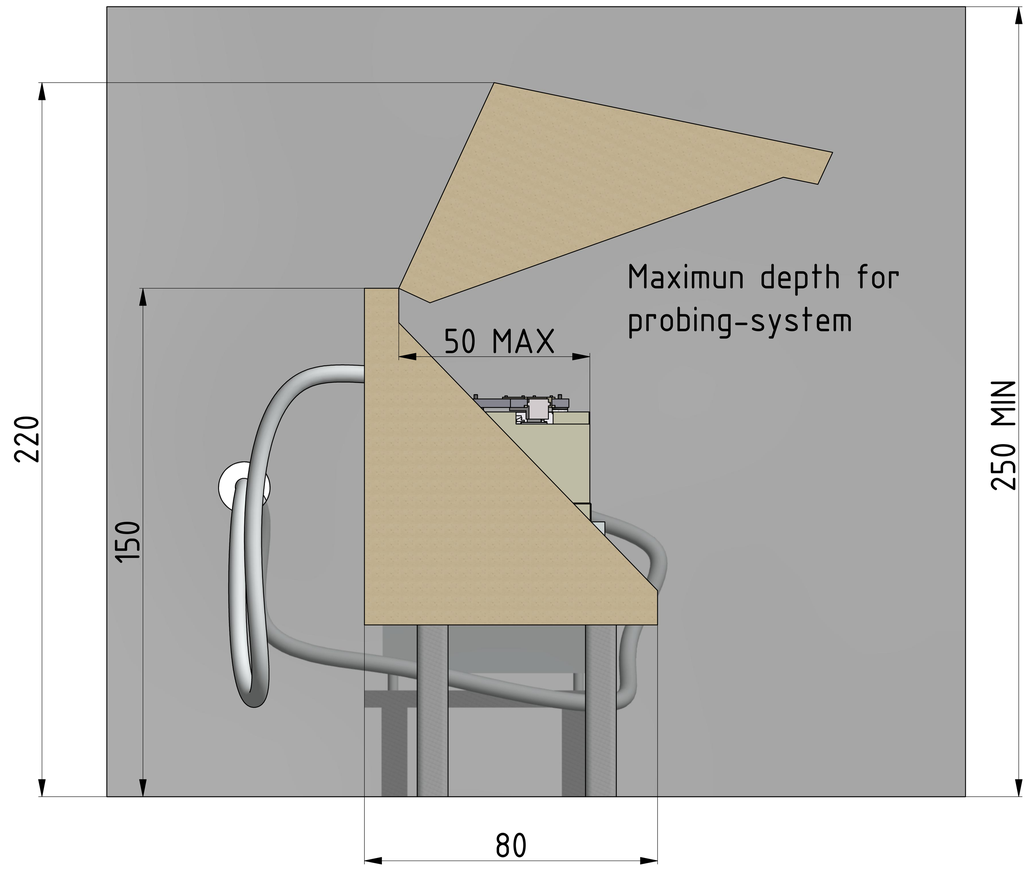


Power supply : mind. 5 plug sockets, 230V, 50-60 Hz, 200 W
Air supply : min. 3 bar, air usage 0,2 l/min, pressure regulation + filter is recommended

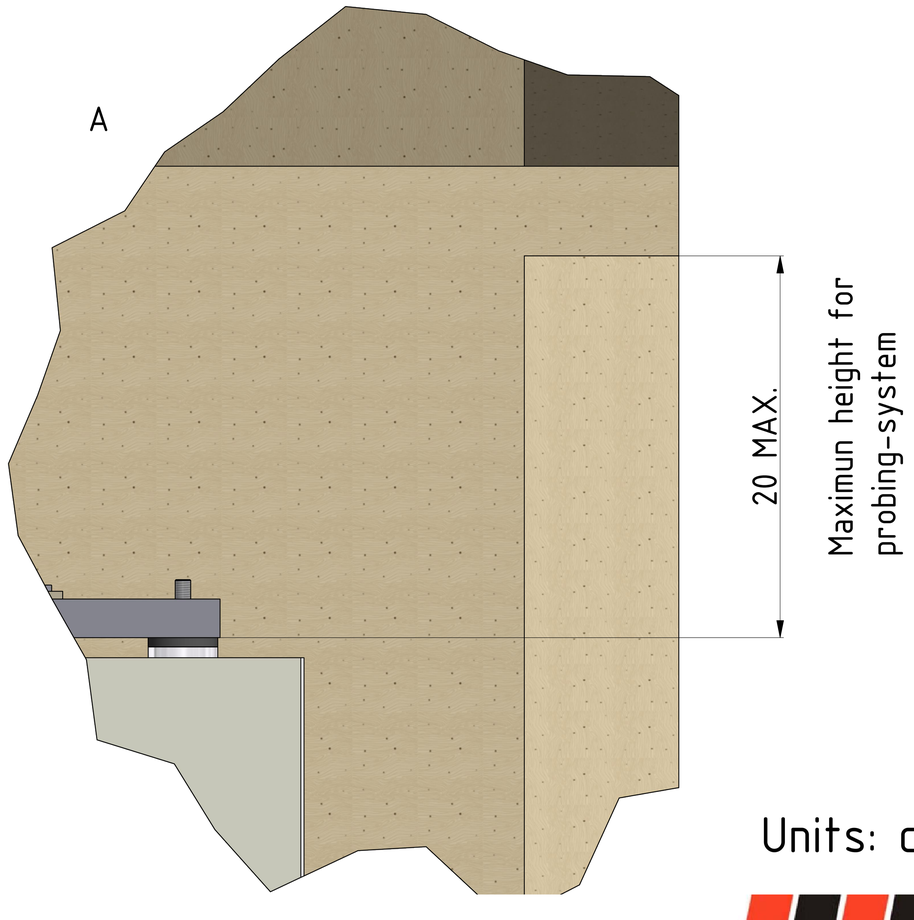


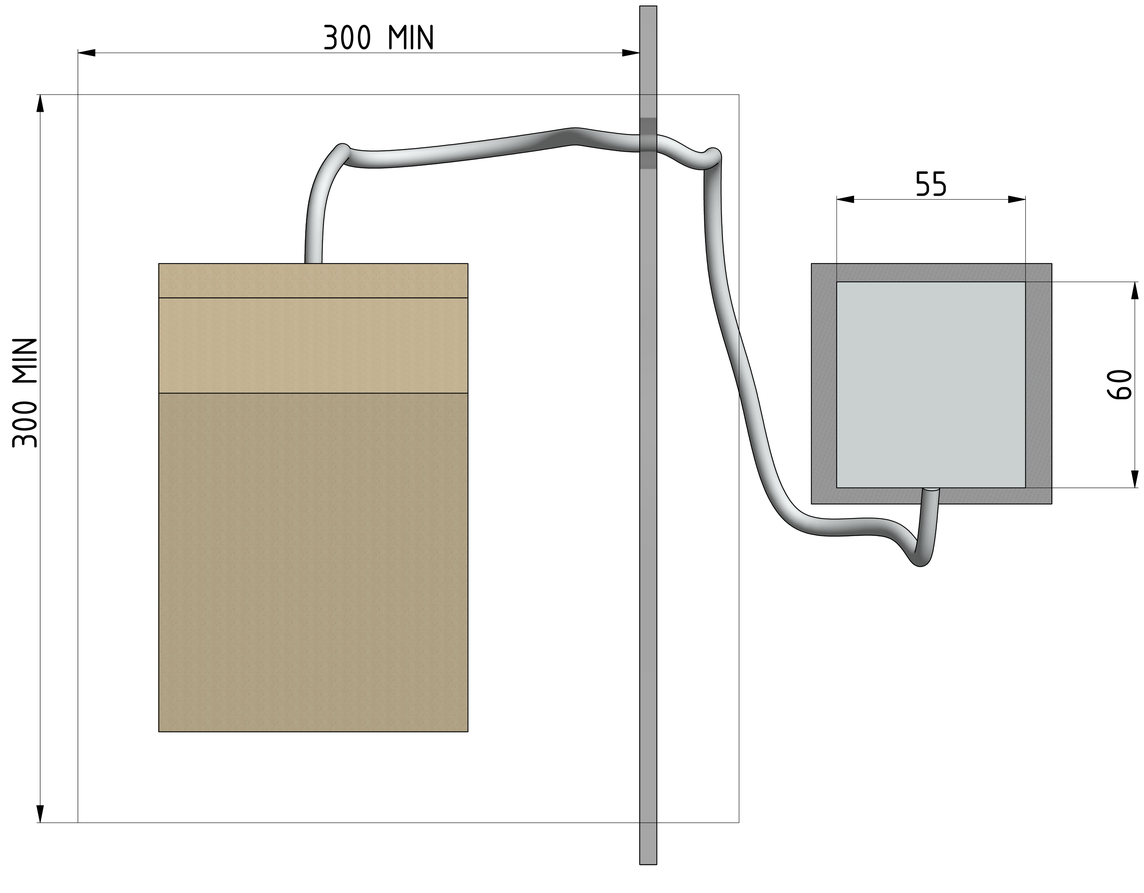


Units: cm

SIOS Meßtechnik GmbH

# Setup advice NMM-1